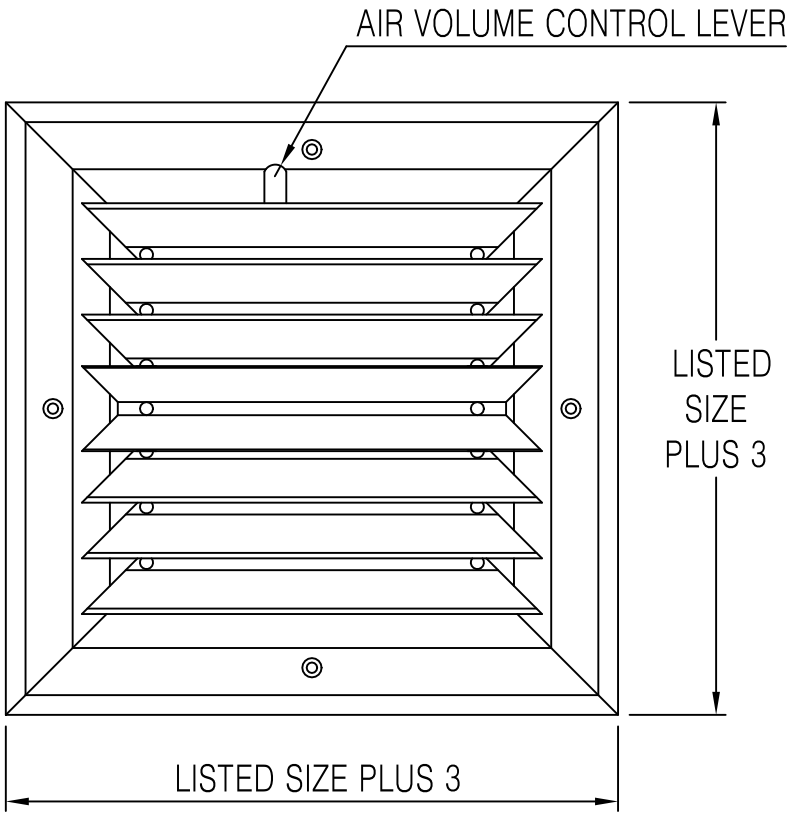

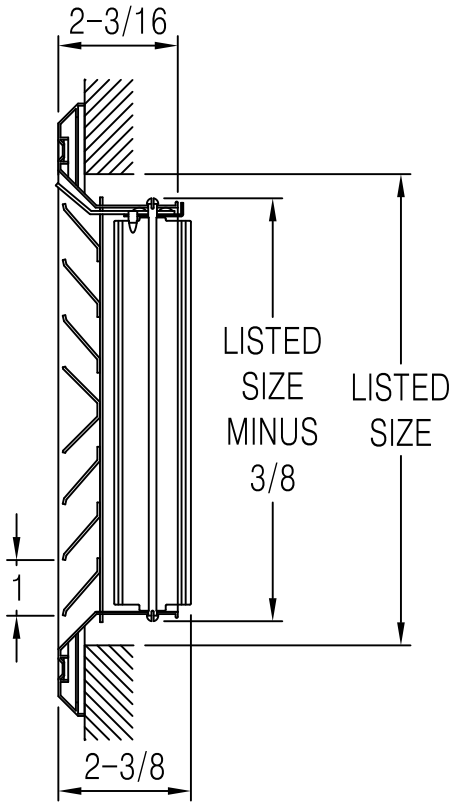

OPEN

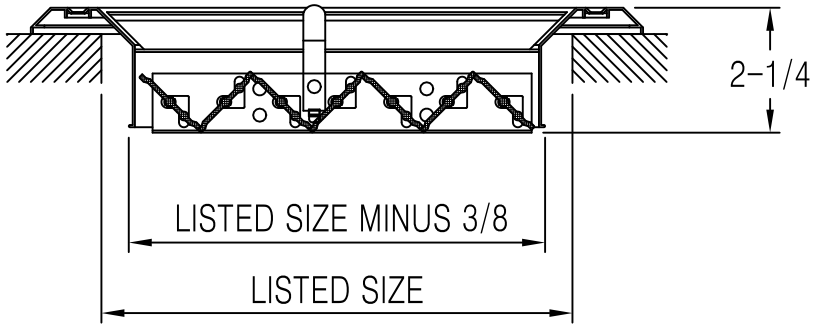

CLOSED

402102 Available Sizes (In.)					
HT	WIDTH				
	6	8	10	12	14
6	●				
8		●			
10			●		
12				●	
14					●

402102-Aluminum Square Ceiling Diffuser 2-Way

- Extruded aluminum construction
- For sidewall or ceiling application
- Two-way air deflection
- Opposed-blade damper
- Inconspicuous fingertip lever for air volume control
- Durable coating
- Available finish:White